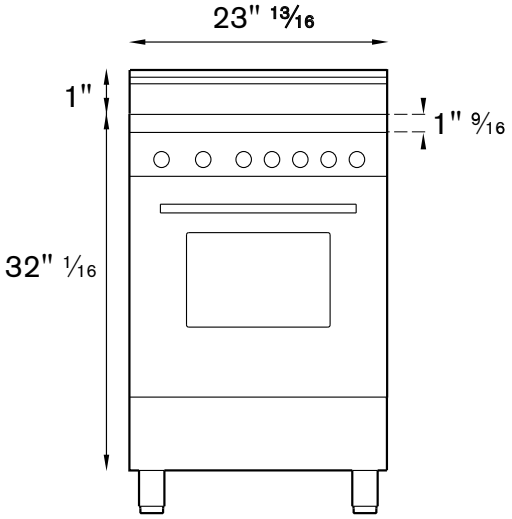
23" 13/16
1"
1" 9/16
32" 1/16

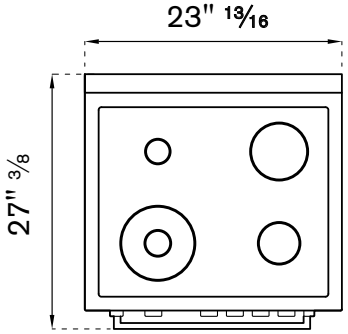
23" 13/16
27" 3/8

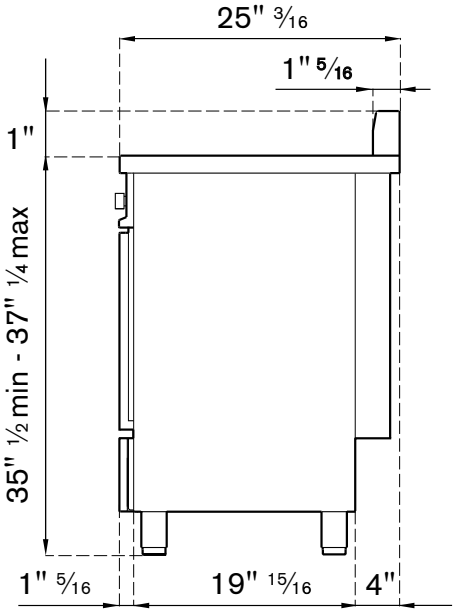
25" 3/16
1" 5/16
1"
35" 1/2 min - 37" 1/4 max
1" 5/16
19" 15/16
4"

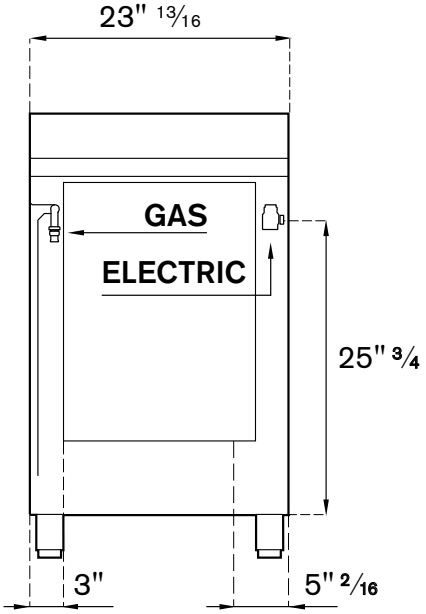
23" 13/16
GAS
ELECTRIC
25" 3/4
3"
5" 2/16

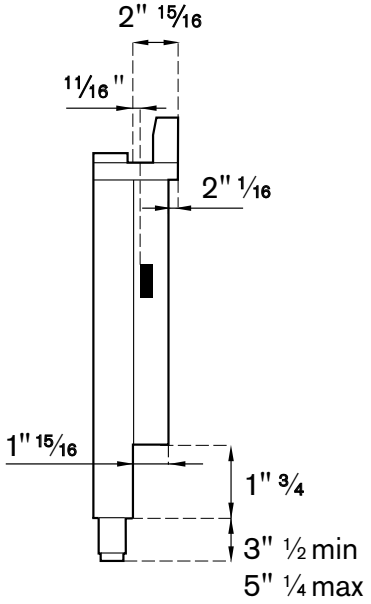
2" 15/16
11/16"
2" 1/16
1" 15/16
1" 3/4
3" 1/2 min
5" 1/4 max